Product data sheet
Characteristics

XMLD001R1S11
pressure switch XMLD 1 bar - 2 stages fixed scale - 2 C/O

Main

Range of product	OsiSense XM
Product or component type	Electromechanical pressure sensor
Pressure sensor type	Electromechanical pressure sensor
Device short name	XMLD
Pressure sensor size	14.50 psi (1 bar)
Controlled fluid	Air (0…160 °C) Hydraulic oil (0…160 °C)
Fluid connection type	G 1/4 (female) conforming to ISO 228
Electrical connection	Screw-clamps terminals, 1 x 0.5...2 x 2.5 mm²
AWG gauge	AWG 20...AWG 14
Cable entry	Cable gland 0.35…0.51 in (9…13 mm)
Contacts type and composition	2 C/O snap action, silver contacts 2 C/O staggered, silver contacts
Product specific application	Dual stage
Pressure switch type of operation	Detection of 2 single thresholds
Electrical circuit type	Control circuit
Scale type	Fixed differential
Local display	Without
Maximum permissible accidental pressure	32.63 psi (2.25 bar)
Destruction pressure	65.27 psi (4.5 bar)
Pressure actuator	Diaphragm
Materials in contact with fluid	FPM, FKM 304L stainless steel Steel
Enclosure material	Zinc alloy
[In] rated current	3 A, B300, AC-15 (Ue = 120 V) conforming to EN/IEC 60947-5-1 1.5 A, B300, AC-15 (Ue = 240 V) conforming to EN/IEC 60947-5-1 0.1 A, R300, DC-13 (Ue = 250 V) conforming to EN/IEC 60947-5-1

Disclaimer: This documentation is not intended as a substitute for and is not to be used for determining suitability or reliability of these products for specific user applications

Complementary

Spread between 2 stages	1.16…10.59 psi (0.08…0.73 bar)
Natural differential at low setting	0.44 psi (0.03 bar)
Natural differential at high setting	1.02 psi (0.07 bar)
Maximum permissible pressure - per cycle	18.13 psi (1.25 bar)
Terminal block type	8 terminals
Maximum operating rate	120 cyc/mn
Repeat accuracy	2 %
[Ui] rated insulation voltage	300 V conforming to UL 508 500 V conforming to EN/IEC 60947-1 300 V conforming to CSA C22.2 No 14
[Uimp] rated impulse withstand voltage	EN/IEC 60947-1 6 kV
Maximum resistance across terminals	25 mOhm conforming to IEC 255-7 category 3 25 mOhm conforming to NF C 93-050 method A
Short-circuit protection	10 A cartridge fuse, type gG (gl)
Mechanical durability	4000000 cycles
Setting	External
Height	6.38 in (162 mm)
Depth	4.33 in (110 mm)
Width	4.33 in (110 mm)
Net weight	5.68 lb(US) (2.575 kg)

Environment

Standards	UL 508 CE EN/IEC 60947-5-1 CSA C22.2 No 14
Product certifications	CSA EAC UL
Protective treatment	TC standard version
Ambient air temperature for operation	-13…158 °F (-25…70 °C)
Ambient air temperature for storage	-40…158 °F (-40…70 °C)
Operating position	Any position
Vibration resistance	2 gn conforming to IEC 60068-2-6 (f = 30…500 Hz)
Shock resistance	30 gn conforming to IEC 60068-2-27
Electrical shock protection class	Class I conforming to IEC 1140 Class I conforming to IEC 536 Class I conforming to NF C 20-030
IP degree of protection	IP66 conforming to EN/IEC 60529

Packing Units

Package 1 Weight	0.00 lb(US) (0.001 kg)
Package 1 Height	1.500 dm
Package 1 width	1.500 dm
Package 1 Length	1.501 dm

Offer Sustainability

Sustainable offer status	Green Premium product
REACh Regulation	REACh Declaration
EU RoHS Directive	Pro-active compliance (Product out of EU RoHS legal scope) EU RoHS Declaration
Mercury free	Yes

RoHS exemption information	Yes
Environmental Disclosure	Product Environmental Profile

Contractual warranty

Warranty	18 months

XMLD001R1S11

Dimensions

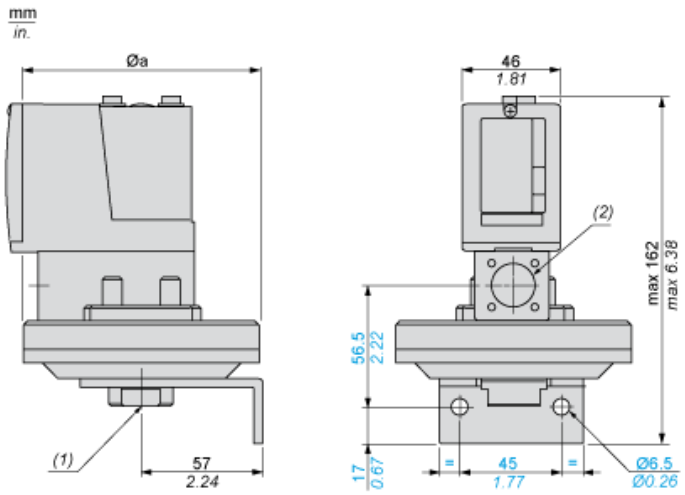

Ø a = 110 mm / 4.33 in.
(1) 1 fluid entry, tapped G1/4 (BSP female)
(2) 1 electrical connections entry, tapped Pg 13.5

Life Is On Schneider Electric

Wiring Diagram

Terminal Model

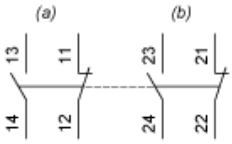

(a) Contact 1
(b) Contact 2

Operating Curves

High Setting Tripping Points of Contacts 1 and 2

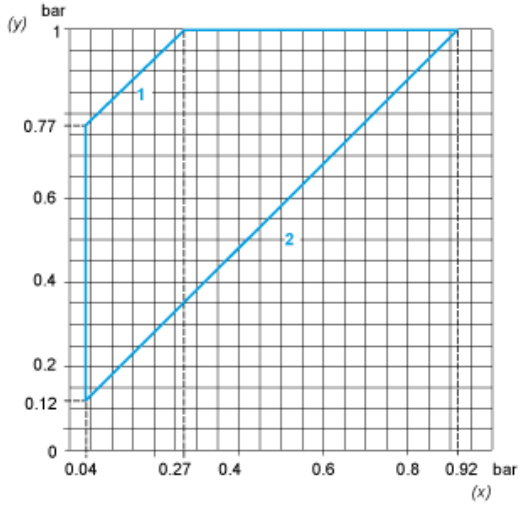

(y) PH2 setting (rising pressure)
(x) PH1 setting (rising pressure)
1 : Maximum differential
2 : Minimum differential

Natural Differential of Contacts 1 and 2

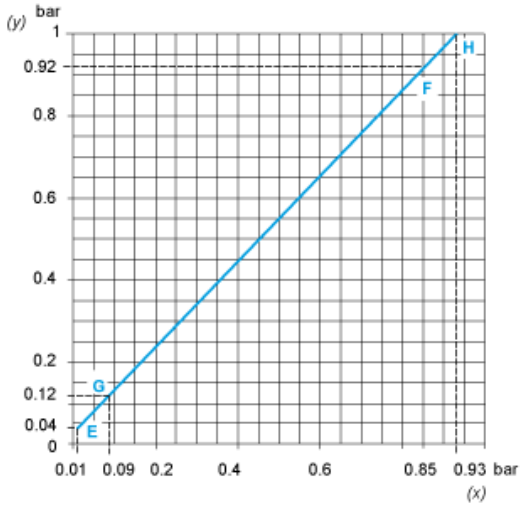

(y) Rising pressure
(x) Falling pressure
EF : Contact 1
GH : Contact 2

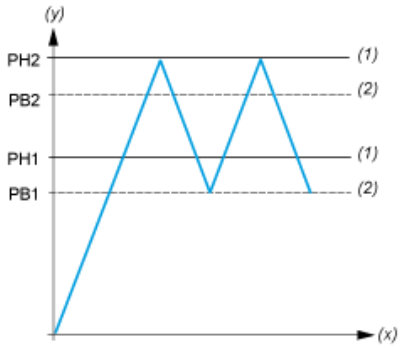

(y)	Pressure
(x)	Time
(1)	Adjustable value
(2)	Non adjustable value
PH :	High point
PB :	Below point