Single Pole Devices and Temporary Power

400A, 600V AC/DC

Male Receptacles

Ordering Information

Description	Device Color	UPC Number	Catalog Number
400A, thermoplastic elastomer, cable size #4 - 4/0 AWG,mates with 300A&400A Plugs.	White	783585113074	**HBLMRW**

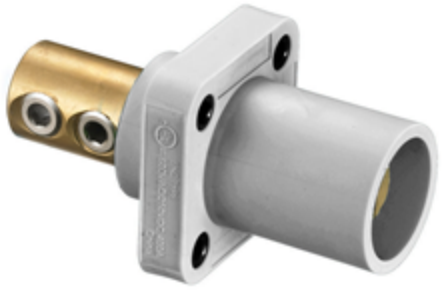

Listings

UL and cUL Listed
UL Enclosure Types 3R, 4X, 12
National Electric Code (NEC), ANSI/NFPA 70

Specifications

Base Compound	Thermoplastic Elastomer
Contact Material	Brass
Retaining Screw Material	Nylon
Mounting Hole	4x #10-32
Termination	(2) 7/32 Socket Head Set Screws

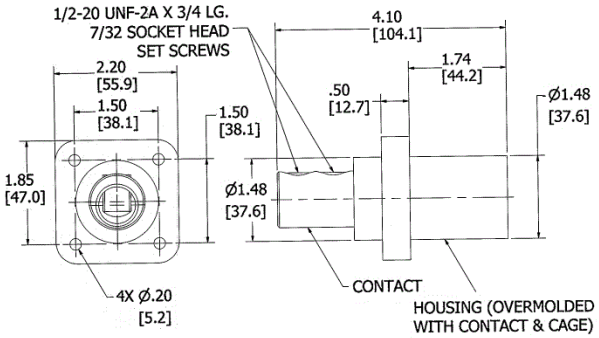

Performance

Electrical

Amperage Rating	400A Maximum
Voltage Rating	600V AC/DC Maximum

Mechanical

Product Identification	Ratings are a permanent part of device
Terminal Accommodation	#4 to 4/0 AWG

Environmental

Flammability	HB per UL94 or CSA 22.2. 0.17

Online Resources

Customer Sales Drawings
eCatalog
Installation Instructions

Dimensions in Inches (mm)

Hubbell Wiring Device-Kellems • Hubbell Incorporated (Delaware) • 40 Waterview Drive • Shelton, CT 06484
Phone (800) 288-6000 • Fax (800) 255-1031 • Specifications subject to change without notice.

Wiring Device-Kellems