Product data sheet
Characteristics

XMLCL35R2S12
pressure switch XMLC 350 mbar - adjustable scale 2 thresholds - 2 C/O

Main

Range of product	OsiSense XM
Product or component type	Electromechanical pressure sensor
Pressure sensor type	Electromechanical pressure sensor
Device short name	XMLC
Pressure sensor size	5.08 psi (0.35 bar)
Controlled fluid	Air (0…160 °C) Hydraulic oil (0…160 °C)
Fluid connection type	G 1/4 (female) conforming to ISO 228
Electrical connection	Screw-clamps terminals, 1 x 0.5...2 x 2.5 mm²
AWG gauge	AWG 20...AWG 14
Cable entry	Cable gland 7…13 mm
Contacts type and composition	2 C/O
Product specific application	-
Pressure switch type of operation	Regulation between 2 thresholds
Electrical circuit type	Control circuit
Scale type	Adjustable differential
Local display	With
Adjustable range of switching point on rising pressure	0.65…5.08 psi (0.045…0.35 bar)
Adjustable range of switching point on falling pressure	0.36…4.57 psi (0.025…0.315 bar)
Possible differential maximum at high setting	4.35 psi (0.3 bar)
Maximum permissible accidental pressure	32.63 psi (2.25 bar)
Destruction pressure	65.27 psi (4.5 bar)
Pressure actuator	Diaphragm
Materials in contact with fluid	304L stainless steel

Disclaimer: This documentation is not intended as a substitute for and is not to be used for determining suitability or reliability of these products for specific user applications

	FPM, FKM Steel
Enclosure material	Zinc alloy
[In] rated current	3 A, B300, AC-15 (Ue = 120 V) conforming to EN/IEC 60947-5-1 1.5 A, B300, AC-15 (Ue = 240 V) conforming to EN/IEC 60947-5-1 0.1 A, R300, DC-13 (Ue = 250 V) conforming to EN/IEC 60947-5-1

Complementary

Possible differential minimum at low setting	0.29 psi (0.02 bar) +/- 20 bar)
Possible differential minimum at high setting	0.51 psi (0.035 bar) +/- 20 bar)
Maximum permissible pressure - per cycle	18.13 psi (1.25 bar)
Terminal block type	8 terminals
Maximum operating rate	120 cyc/mn
Repeat accuracy	2 %
[Ui] rated insulation voltage	300 V conforming to UL 508 500 V conforming to EN/IEC 60947-1 300 V conforming to CSA C22.2 No 14
[Uimp] rated impulse withstand voltage	6 kV EN/IEC 60947-1
Auxiliary contacts operation	Simultaneous, snap action
Contacts material	Silver contacts
Maximum resistance across terminals	25 mOhm conforming to IEC 255-7 category 3 25 mOhm conforming to NF C 93-050 method A
Short-circuit protection	10 A cartridge fuse, type gG (gl)
Mechanical durability	4000000 cycles
Setting	External
Height	6.38 in (162 mm)
Depth	4.33 in (110 mm)
Width	4.33 in (110 mm)
Net weight	5.68 lb(US) (2.575 kg)

Environment

Standards	CE CSA C22.2 No 14 EN/IEC 60947-5-1 UL 508
Product certifications	CSA UL EAC
Protective treatment	TC standard version
Ambient air temperature for operation	-13…158 °F (-25…70 °C)
Ambient air temperature for storage	-40…158 °F (-40…70 °C)
Operating position	Any position
Vibration resistance	2 gn conforming to IEC 60068-2-6 (f = 30…500 Hz)
Shock resistance	30 gn conforming to IEC 60068-2-27
Electrical shock protection class	Class I conforming to IEC 1140 Class I conforming to IEC 536 Class I conforming to NF C 20-030
IP degree of protection	IP66 conforming to EN/IEC 60529

Packing Units

Unit Type of Package 1	PCE
Number of Units in Package 1	1
Package 1 Weight	30.69 oz (870 g)
Package 1 Height	2.36 in (6 cm)

Package 1 width	5.91 in (15 cm)
Package 1 Length	4.21 in (10.7 cm)

Offer Sustainability

Sustainable offer status	Green Premium product
REACh Regulation	REACh Declaration
EU RoHS Directive	Pro-active compliance (Product out of EU RoHS legal scope) EU RoHS Declaration
Mercury free	Yes
RoHS exemption information	Yes
Environmental Disclosure	Product Environmental Profile

Contractual warranty

Warranty	18 months

XMLCL35R2S12

Dimensions

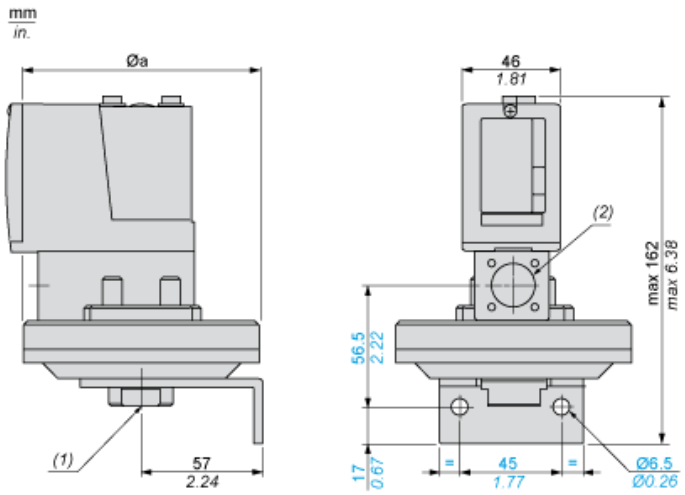

Ø a = 110 mm / 4.33 in.
(1) 1 fluid entry, tapped G1/4 (BSP female)
(2) 1 electrical connections entry, tapped M20 x 1.5

Life Is On Schneider Electric

Wiring Diagram

Terminal Model

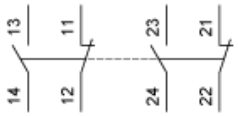

Operating Curves

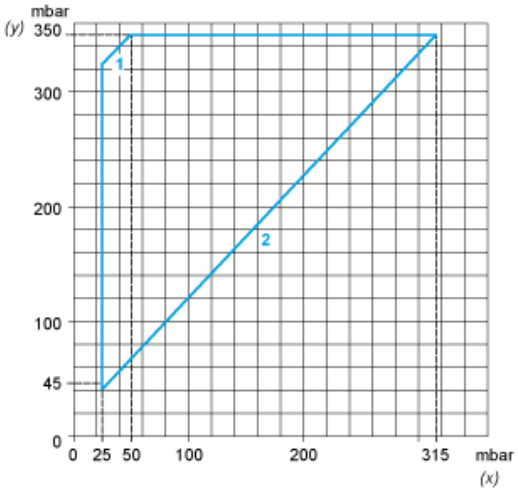

(y) Rising pressure
(x) Falling pressure
1 : Maximum differential
2 : Minimum differential

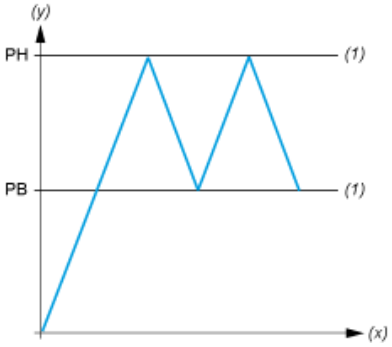

(y) Pressure
(x) Time
(1) Adjustable value
PH : High point
PB : Below point