Product data sheet
Characteristics

LGA36400CU54X
Circuit breaker, PowerPact L, I-Line, Micrologic 6.3E, 400A, 100% rated, 3 pole, 18 kA, 600 VAC, phase ABC

Main

Range of product	PowerPact L
Product or component type	Circuit breaker
Trip Unit Type	Electronic, energy, Micrologic 6.3 E, LSIG
Interrupt Code	G

Complementary

Line Rated Current	400 A
Number of Poles	3P
Interrupt Rating	65 kA at 240 V AC 35 kA at 480 V AC 18 kA 600 V AC
Voltage Rating	600 V AC
Continuous current rating	100 %
Protection technology	Current limiter
Mounting mode	I-Line
Electrical connection	I-Line connection line Lugs load
Wire Size	AWG 2/0...500 kcmil (aluminium/copper) for 2 cable(s)
Terminal Type	AL600LS52K3
I-Line Phase Connection	ABC
Height	14.7 in (373.38 mm)
Width	5.94 in (150.88 mm)
Depth	6.61 in (167.89 mm)
Tightening torque	442.54 lbf.in (50 N.m) 0.11…0.37 in² (70…240 mm²) AWG 2/0...500 kcmil)

Disclaimer: This documentation is not intended as a substitute for and is not to be used for determining suitability or reliability of these products for specific user applications

Environment

Product certifications	CSA 22-2 CCC IEC CE UL 489 NMX NEMA

Packing Units

Package 1 Weight	17.00 lb(US) (7.711 kg)

Contractual warranty

Warranty	18 months

Life Is On Schneider Electric

LGA36400CU54X
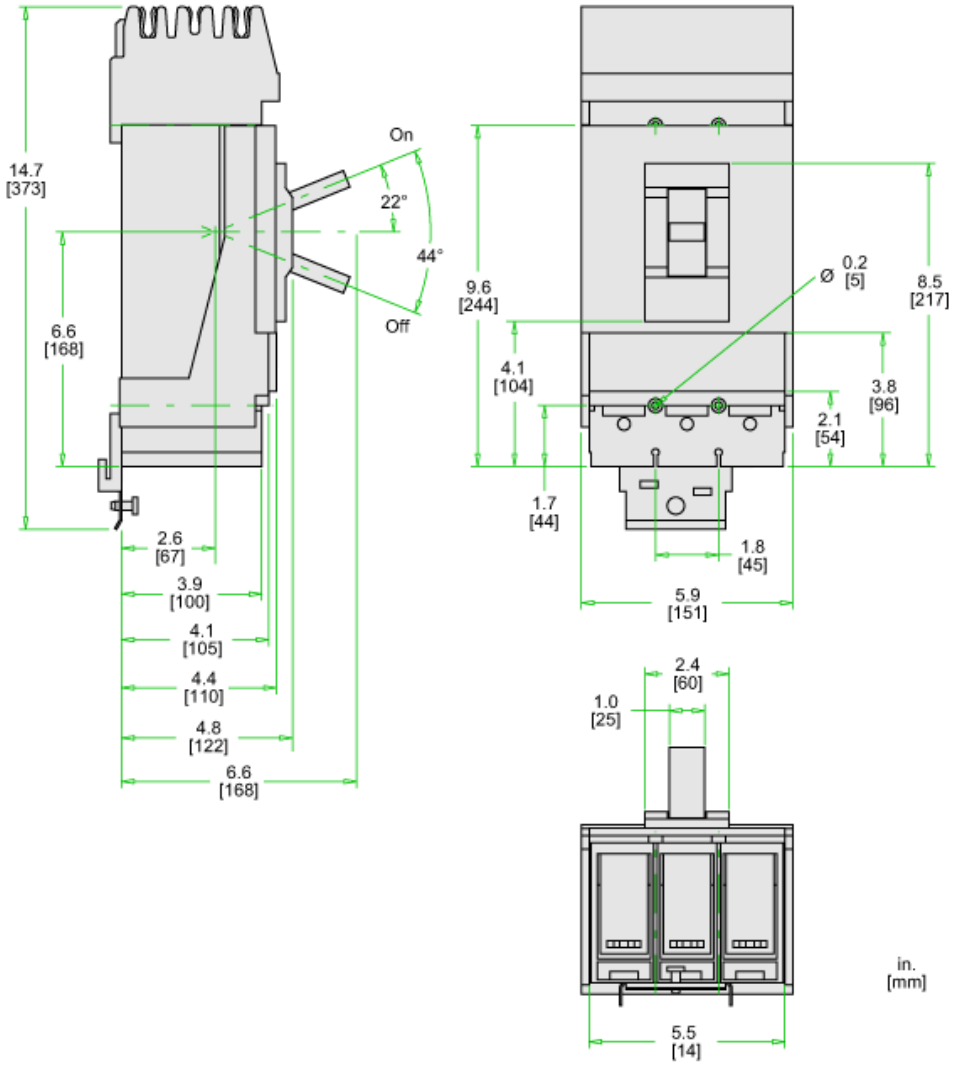
Approximate Dimensions