Product data sheet
Characteristics

XMLR100M2P05
Pressure sensors XMLR 100bar - G 1/4 - 24VDC - 2xPNP - M12

Main

Range of product	OsiSense XM
Product or component type	Electronic pressure sensors
Pressure sensor type	Pressure transmitter
Pressure switch type of operation	Pressure switch with 2 switching outputs
Device short name	XMLR
Pressure sensor size	1450 psi (9997.40 kPa) 1450.38 psi (100 bar)
Maximum permissible accidental pressure	4351.13 psi (300 bar) 30 MPa 4350 psi (29992.19 kPa)
Destruction pressure	8702.26 psi (600 bar) 8700 psi (59984.39 kPa) 60 MPa
Controlled fluid	Fresh water 32…176 °F (0…80 °C)) Air -4…176 °F (-20…80 °C)) Hydraulic oil -4…176 °F (-20…80 °C)) Refrigeration fluid -4…176 °F (-20…80 °C))
Fluid connection type	G 1/4 (female) DIN 3852-Y
[Us] rated supply voltage	24 V DC SELV 17…33 V)

Complementary

Current consumption	<= 50 mA
Electrical connection	Male connector M12, 4 pins
Type of output signal	Discrete
Discrete output type	Solid state PNP, 2 NO/NC programmable
Maximum switching current	250 mA
Contacts type and composition	2 NO/NC programmable
Scale type	Fixed differential
Maximum voltage drop	2 V
Adjustable range of switching point on rising pressure	116…1450 psi (799.79…9997.40 kPa) 0.8…10 MPa 116.03…1450.38 psi (8…100 bar)
Adjustable range of switching point on falling pressure	72.5…1407 psi (499.87…9700.92 kPa) 72.52…1406.87 psi (5…97 bar)

Disclaimer: This documentation is not intended as a substitute for and is not to be used for determining suitability or reliability of these products for specific user applications

	0.5…9.7 MPa
Minimum differential travel	43.5 psi (299.92 kPa) 0.3 MPa 43.51 psi (3 bar)
Materials in contact with fluid	316L stainless steel
Front material	Polyester
Housing material	316L stainless steel Polyacrylamide
Operating position	Any position, but disposals can falsified the measurement in case of upside down mounting
Protection type	Overload protection Reverse polarity Short-circuit protection Overvoltage protection
Response time on output	<= 5 ms discrete output
Switching output time delay	0...50 s in steps of 1 second
Display type	4 digits 7 segments
Local signalling	Light ON when switch is actuated 2 LEDs yellow)
Display response time type	Fast 50 ms Normal 200 ms Slow 600 ms
Maximum delay first up	300 ms
Overall accuracy	<= 1 % of the measuring range
Measurement accuracy on switching output	<= 0.6 % of the measuring range
Repeat accuracy	<= 0.2 % of the measuring range
Drift of the sensitivity	+/- 0.03 % of measuring range/°C
Drift of the zero point	+/- 0.1 % of measuring range/°C
Display accuracy	<= 1 % of the measuring range
Mechanical durability	10000000 cycles
Depth	1.65 in (42 mm)
Height	3.46 in (88 mm)
Width	1.61 in (41 mm)
Net weight	0.41 lb(US) (0.186 kg)
[Uimp] rated impulse withstand voltage	0.5 kV DC
Electromagnetic compatibility	Susceptibility to electromagnetic fields 10 V/m 80...2000 MHz EN/IEC 61000-4-3 Immunity to conducted RF disturbances 10 V 0.15...80 MHz EN/IEC 61000-4-6 Surge immunity test 1 kV EN/IEC 61000-4-5 Electrical fast transient/burst immunity test 2 kV EN/IEC 61000-4-4 Electrostatic discharge immunity test 8 kV air, 4 kV contact EN/IEC 61000-4-2

Environment

Marking	CE
Product certifications	EAC CULus
Standards	UL 61010-1 EN/IEC 61326-2-3
Ambient air temperature for operation	-4…176 °F (-20…80 °C)
Ambient air temperature for storage	-40…176 °F (-40…80 °C)
IP degree of protection	IP65 conforming to EN/IEC 60529 IP67 EN/IEC 60529
Vibration resistance	20 gn 10…2000 Hz)EN/IEC 60068-2-6
Shock resistance	50 gn EN/IEC 60068-2-27

Packing Units

Unit Type of Package 1	PCE
Number of Units in Package 1	1
Package 1 Weight	6.49 oz (184 g)

Package 1 Height	2.56 in (6.5 cm)
Package 1 width	2.95 in (7.5 cm)
Package 1 Length	5.12 in (13 cm)
Unit Type of Package 2	S02
Number of Units in Package 2	20
Package 2 Weight	9.12 lb(US) (4.135 kg)
Package 2 Height	5.91 in (15 cm)
Package 2 width	11.81 in (30 cm)
Package 2 Length	15.75 in (40 cm)

Offer Sustainability

REACh Regulation	REACh Declaration
REACh free of SVHC	Yes
EU RoHS Directive	Pro-active compliance (Product out of EU RoHS legal scope) EU RoHS Declaration
Mercury free	Yes
RoHS exemption information	Yes

XMLR100M2P05

Dimensions

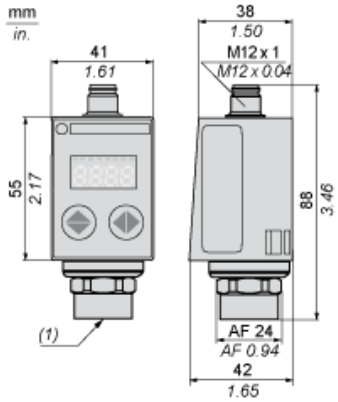

(1) Fluid entry: G 1/4 A female

Connections and Schema

Connector Wiring

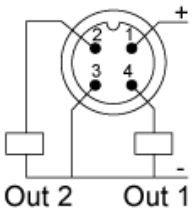

Switching Output Description. Hysteresis Mode

The hysteresis switching mode is typically used for the “pumping and/or emptying applications”.

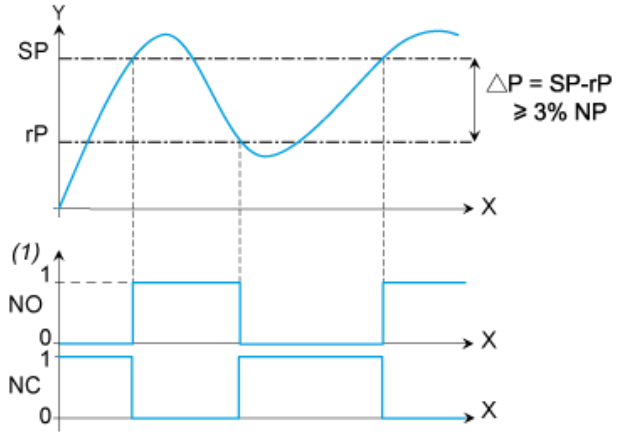

X : Time
Y : Pressure
(1) Output
NP : Nominal Pressure
SP : Set point (adjustable from 8 % to 100 % NP)
rP : Reset point (adjustable from 5 % to 97 % NP)

Switching Output Description. Window Mode

The window switching mode is typically used for the “pressure regulation applications”

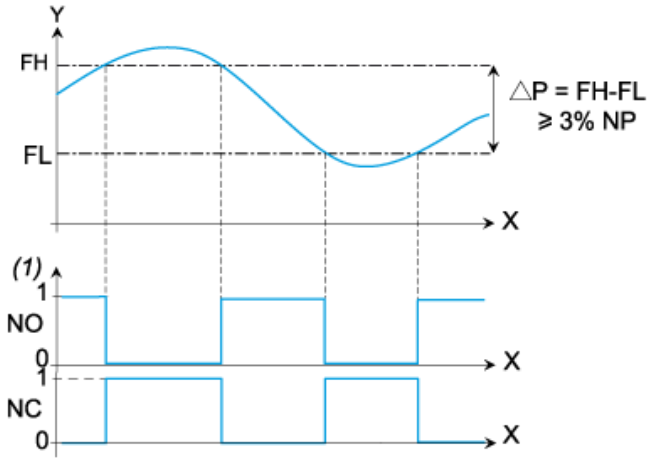

X : Time
Y : Pressure
(1) Output
NP : Nominal pressure
FH : High switching point (adjustable from 8 % to 100 % NP)
FL : Low switching point (adjustable from 5 % to 97 % NP)

Switching Output Description. Time Delay

The Time Delay is typically used to filter out the fast pressure transients.

The output only switches after a time “dS” and “dr” adjustable from 0 to 50 seconds.

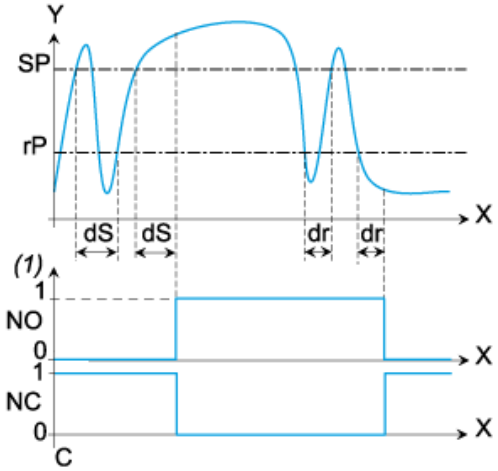

X :	Time
Y :	Pressure
(1)	Output
SP :	Set point
rP :	Reset point
dS :	Time delay on the set point
dr :	Time delay on the reset point