STANPRO

Project: _____ Type: _____

Drawn by: _____ Catalogue #: _____ Date: _____

Individual Spec Sheet

RDE-L

LED POST TOP

ORDERING INFORMATION

Order code:	68175
Model number:	RDE-LS15-W/40KBKPR
UPC:	069549014985
Case quantity:	1/1

PHYSICAL DATA

Dimensions:	17.7" x 30.37" (431.8 mm x 762 mm)
Type:	Post top
Finish:	Black
Lens material:	Clear glass

PERFORMANCE DATA

Watts (W):	64
Volts (VAC):	120-277
Color temperature (K)[1]:	4 000
Lumen output (lm)[2]:	6 766
Lumen per Watts (lm/W):	105
CRI:	80
Distribution type:	Type V
EPA (ft²):	1.96
Life L70 (h)[3]:	42 000
Dimming:	0-10 V
Power factor:	0.99
THD (%):	10.5 - 11.9
Frequency (Hz):	50/60
Surge protection (kV):	4
Output current (mA):	101
Operating temp. range:	-40°C to +40°C

[1] Typical color temperature range: +/- 5 %
[2] Lumen values are derived from photometric testing. Initial lumens range: +/- 10 %
[3] Life hours are derived from IESNA LM80-08 testing report and projected per IESNA TM-21-11 extrapolations

5 yrs warranty

quick ship

LED fixture

IP 65

ICES 005

This lighting equipment complies with Canadian standard ICES-005 for use in residential applications.
Data is based upon tests performed in a controlled environment.
Actual performance can vary depending on operating conditions. Specifications are subject to change without notice.

2233 rue de l'Aviation, Dorval, QC H9P 2X6
514.342.1199, 1.800.361.6965 • 514.807.3011 • www.standardpro.com

STANPRO

DIMENSIONS

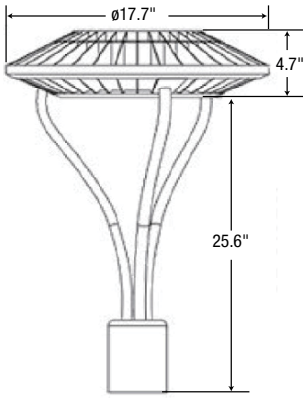

Ø 3 1/4'' (ID)

ORDERING GUIDE

RDE	—	L	S1	5	—	W	/	40K	—	BK	/	PR	/

Series	Lamp type	Lumen package (W)	Distribution type	Volts (V)	Color temp. (K)	Casting color	Mandatory option	Options
RDE	**L -** LED	**S1 -** 70 **S2 -** 100 **S3 -** 150	**5 -** Type 5	**W -** 120-277 **H -** 347-480	**40K -** 4 000 **50K -** 5 000	**BK -** Black (standard) **BZ -** Bronze **WH -** White **GY -** Grey **SP -** Special color	**PR -** 3 pin photocell receptacle only[1]	**PR7 -** 7 pin photocell receptacle only[1] **KV -** 10 kV surge protection

[1] Twist lock photocell supplied by others

PHOTOMETRIC DATA[1]

68175 • RDE-LS15-W/40KBKPR • 5 989.7 lm

Polar candela distribution

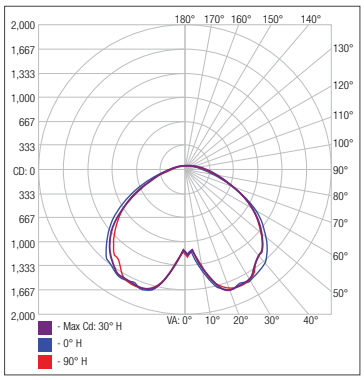

Zonal lumen summary

Zone	Lumens	% Fixture
0-30	1 528.7	25.5%
0-40	2 637.9	44%
0-60	4 865.9	81.2%
60-90	1 123.8	18.8%
70-100	414.8	6.9%
90-120	0	0%
0-90	5 989.7	100%
90-180	0	0%
0-180	5 989.7	100%

Illuminance at a distance

	Center beam fc	Beam width	
1.7'	451 fc	5.6'	5.5'
3.3'	120 fc	10.9'	10.6'
5.0'	52.2 fc	16.6'	16.1'
6.7'	29.1 fc	22.2'	21.6'
8.3'	18.9 fc	27.5'	26.7'
10.0'	13.0 fc	33.2'	32.2'

Vert. spread: 117.8°
Horiz. spread: 116.3°

[1] Complete IES files available on our website.

Qty	Description	Price

I accept the specifications of the luminaire configuration mentioned above.

Name: _____

Company: _____

Signature: _____ Date: _____

Data is based upon tests performed in a controlled environment. Actual performance can vary depending on operating conditions.
All products are subject to change or may be discontinued any time without notice.

2233 rue de l'Aviation, Dorval, QC H9P 2X6
514.342.1199, 1.800.361.6965 • 514.807.3011 • www.standardpro.com