Straight Blade Devices
15A, 125V, 2 Pole, 3 Wire Grounding
Elastogrip®Connector Bodies

HUBBELL

Features

- Thermoplastic elastomer housing
- Integral weatherproofing shroud seals connection between plug and connector
- Nylon compression nut keeps water and dust from getting into the body around the cord

Ordering Information

Description	Cord Diameter	UPC	Catalog Number
Yellow elastomer, watertight	.300"-.655"(7.6-16.6)	783585013022	HBL15W47

Listings

UL Listed to UL498 File E1706
CSA Certified to C22.2 No. 42 File 280C
NEMA® WD-6 Compliant

Specifications

Housing	Thermoplastic Elastomer
Contact Holder	Nylon
Terminal Retainer	Clear Polycarbonate
Contacts	.040" (1.0) Brass
Terminal Screws	#8-32 Brass , multiple drive
Terminal Clamp	Nickel plated steel
Assembly Screws	Plated steel

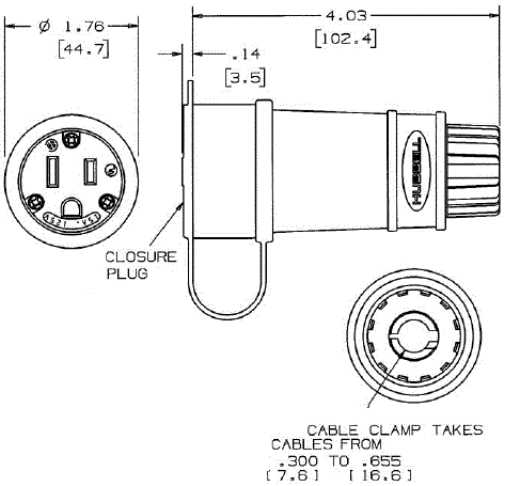

Performance

Electrical

Current Interrupting	Certified for current interrupting at full rated current
Dielectric Voltage	Withstands 2,000V minimum

Mechanical

Product Identification	Ratings are a permanent part of the device
Terminal Accommodation	#18-#12 AWG. Stranded copper wire only.
Terminal Identification	Terminals identified in accordance with UL 498 and CSA

Environmental

Flammability	UL 94 HB or better
IP Suitability	IP55
Operating Temperatures	Maximum continuous 75°C; minimum -40°C (w/o impact)

Resources

Customer Use Drawing
eCatalog

Dimensions in Inches (mm)

Hubbell Wiring Device-Kellems • Hubbell Incorporated (Delaware) • 40 Waterview Drive • Shelton, CT 06484
Phone (800) 288-6000 • Fax (800) 255-1031 • Specifications subject to change without notice.

HUBBELL®
Wiring Device-Kellems