Product data sheet
Characteristics

XMLG001D21
pressure sensor XMLG - 0..1 bar - G 1/4A (male) - 24 V - 4..20 mA - set of 1

Main

Range of product	OsiSense XM
Product or component type	Electronic pressure sensors
Pressure sensor type	Pressure transmitter
Pressure sensor name	XMLG
Pressure sensor size	14.50 psi (1 bar)
Fluid connection type	G 1/4A (male) DIN 3852-E
Controlled fluid	Air 5…257 °F (-15…125 °C)) Corrosive fluid 5…257 °F (-15…125 °C)) Hydraulic oil 5…257 °F (-15…125 °C)) Fresh water 32…257 °F (0…125 °C))
Type of output signal	Analogue
Analogue output function	4...20 mA, 2 wires
Electrical connection	1 male connector M12, 3 pins
[Us] rated supply voltage	12 V DC 8…33 V) 24 V DC 8…33 V)
Quantity per set	Set of 1
Type of packing	Individual
Diameter	0.90 in (22.8 mm)

Complementary

Pressure setting range	0.00…14.50 psi (0…1 bar)
Maximum permissible accidental pressure	39.16 psi (2.7 bar)
Destruction pressure	43.51 psi (3 bar)
Local display	Without
Electrical circuit type	Control circuit
Current consumption	< 20 mA
Materials in contact with fluid	Ceramic FPM (Viton) Stainless steel type AISI 303
Operating position	Any position
Protection type	Load short-circuit Reverse polarity

Disclaimer: This documentation is not intended as a substitute for and is not to be used for determining suitability or reliability of these products for specific user applications

Surge withstand	1 kV 42 Ohm EN/IEC 61000-4-5 500 kV 12 Ohm EN/IEC 61000-4-5
[Uimp] rated impulse withstand voltage	0.5 kV
Response time on output	< 2 ms
Drift of the sensitivity	+/- 0.015 % of measuring range/°C
Drift of the zero point	+/- 0.015 % of measuring range/°C
Measurement accuracy	+/- 0.3 % of the measuring range
Repeat accuracy	+/- 0.1 % of the measuring range
Mechanical durability	10000000 cycles
Net weight	0.21 lb(US) (0.095 kg)
Height	2.29 in (58.1 mm)
Length	1.91 in (48.5 mm)
Scale type	Fixed differential

Environment

Standards	CE EN/IEC 61326-2-3
Product certifications	EAC CSA C22.2 No 14 UL 508
Protective treatment	TC
Ambient air temperature for operation	5…185 °F (-15…85 °C)
Ambient air temperature for storage	-40…185 °F (-40…85 °C)
Vibration resistance	20 gn 9…2000 Hz)EN/IEC 60028-2-6
Shock resistance	25 gn 11 ms EN/IEC 60068-2-27
Resistance to electrostatic discharge	15 kV in air EN/IEC 61000-4-2 8 kV on contact EN/IEC 61000-4-2
Resistance to electromagnetic fields	182.88 V/yd (200 V/m) 80…1000 Hz EN/IEC 61000-4-3
Resistance to fast transients	4 kV EN/IEC 61000-4-4
Resistance to conducted disturbances	30 V 0.15…80 Hz)EN/IEC 61000-4-6
Resistance to magnetic fields	98.43 A/ft (30 A/m) 50 Hz EN/IEC 61000-4-8
IP degree of protection	IP66 conforming to EN/IEC 60529 IP67 EN/IEC 60529
NEMA degree of protection	NEMA 4

Packing Units

Unit Type of Package 1	PCE
Number of Units in Package 1	1
Package 1 Weight	4.66 oz (132 g)
Package 1 Height	1.97 in (5 cm)
Package 1 width	4.13 in (10.5 cm)
Package 1 Length	5.31 in (13.5 cm)
Unit Type of Package 2	S02
Number of Units in Package 2	12
Package 2 Weight	4.16 lb(US) (1.888 kg)
Package 2 Height	5.91 in (15 cm)
Package 2 width	11.81 in (30 cm)
Package 2 Length	15.75 in (40 cm)

Offer Sustainability

REACh Regulation	REACh Declaration
EU RoHS Directive	Pro-active compliance (Product out of EU RoHS legal scope) EU RoHS Declaration
Mercury free	Yes

RoHS exemption information	Yes

Contractual warranty

Warranty	18 months

XMLG001D21

Dimensions

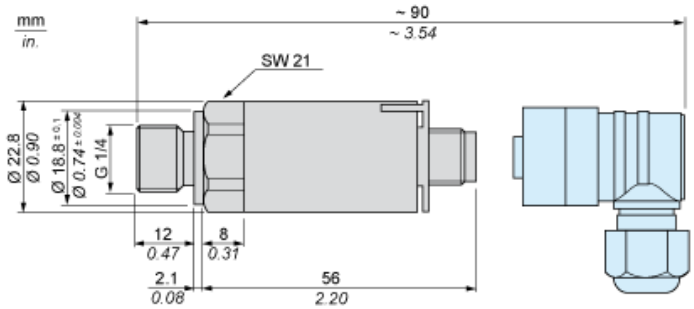

Wiring Diagram

2-Wire Technique (4-20 mA)

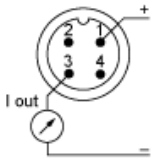

XMLG001D21
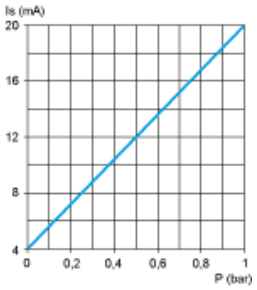
Output Curves